PRECISION AC WATT OR VAR TRANSDUCER *MODELS* GW5- & GV5-

ACCURATE TO 0.2% OF READING

DESCRIPTION

The model GW5 Watt transducer provides power measurements to within ±0.2% of reading accuracy in single- or polyphase systems. The Model GV5 VAR transducer provides reactive power measurements to within ±0.2% of reading accuracy in single- or polyphase systems. The electrically-isolated dc output is proportional to the instantaneous power averaged over several cycles.

Currents up to 20A and voltages up to 600Vac can be directly connected to the GW5 and GV5, thus eliminating the additional cost and additive errors of current and voltage transformers for these ranges. The GW5 and GV5 can be used with OSI metering class current transformers for measurements up to 10 kiloamperes.

Specific outputs can be selected to interface with any data acquisition system from a simple recorder to a computer-, SCADA-, or PLC-based system.

The GW5 is widely used in a variety of applications, including hydroelectric generator output measurement, end-of-line appliance testing for energy consumption, building automation, energy management, and cogeneration systems.

5 YEAR WARRANTY

FEATURES

- Accurate regardless of variations in voltage, current, power factor, or load.
- Available in 1-, 1½-, 2-, 2½-, or 3-element configurations.
- Provides Leading/Lagging VAR indication.
- Accuracy maintained over wide temperature range, calibration traceable to **NIST**.
- For UL Listed precision Watt transducers, see AGW Series

APPLICATIONS

- Equipment monitoring for process control.
- Integration into energy management systems, or a variety of sub-metering applications.
- Measurement using direct-connection, current transformers and/or potential transformers.

SINGLE-PHASE, TWO-WIRE MODELS, INTERNAL SENSOR (ONE-ELEMENT)

AC INPUTS		F.S. WATTS or VARS	STANDARD OUTPUTS MODEL GW5- OR GV5-									
VOLTS	AMPS		0-±1mAdc*	0-±1mAdc	0-±10Vdc*	0-±10Vdc	4-20mAdc	4-20mA*	4-12-20mA	4-12-20mA*	0-±5Vdc*	0-±5Vdc
0-150	0 - 1	100	103A	103B	103C	103D	103E	103EG	103EM	103EMG	103CX5	103X5
	0 - 2.5	250	106A	106B	106C	106D	106E	106EG	106EM	106EMG	106CX5	106X5
	0 - 5	500	001A	001B	001C	001D	001E	001EG	001EM	001EMG	001CX5	001X5
	0 - 10	1k	010A	010B	010C	010D	010E	010EG	010EM	010EMG	010CX5	010X5
	0 - 20	2k	019A	019B	019C	019D	019E	019EG	019EM	019EMG	019CX5	019X5
0-300	0 - 1	200	104A	104B	104C	104D	104E	104EG	104EM	104EMG	104CX5	104X5
	0 - 2.5	500	107A	107B	107C	107D	107E	107EG	107EM	107EMG	107CX5	107X5
	0 - 5	1k	002A	002B	002C	002D	002E	002EG	002EM	002EMG	002CX5	002X5
	0 - 10	2k	011A	011B	011C	011D	011E	011EG	011EM	011EMG	011CX5	011X5
	0 - 20	4k	020A	020B	020C	020D	020E	020EG	020EM	020EMG	020CX5	020X5
0-600	0 - 1	500	105A	105B	105C	105D	105E	105EG	105EM	105EMG	105CX5	105X5
	0 - 2.5	1k	108A	108B	108C	108D	108E	108EG	108EM	108EMG	108CX5	108X5
	0 - 5	2k	003A	003B	003C	003D	003E	003EG	003EM	003EMG	003CX5	003X5
	0 - 10	4k	012A	012B	012C	012D	012E	012EG	012EM	012EMG	012CX5	012X5
	0 - 20	8k	021A	021B	021C	021D	021E	021EG	021EM	021EMG	021CX5	021X5

THREE-PHASE, THREE-WIRE MODELS, INTERNAL SENSOR (TWO-ELEMENT)

AC INPUTS		F.S. WATTS or VARS	STANDARD OUTPUTS MODEL GW5- OR GV5-									
VOLTS	AMPS		0-±1mAdc*	0-±1mAdc	0-±10Vdc*	0-±10Vdc	4-20mAdc	4-20mA*	4-12-20mA	4-12-20mA*	0-±5Vdc*	0-±5Vdc
0-150	0 - 1	200	120A	120B	120C	120D	120E	120EG	120EM	120EMG	120CX5	120X5
	0 - 2.5	500	129A	129B	129C	129D	129E	129EG	129EM	129EMG	129CX5	129X5
	0 - 5	1k	004A	004B	004C	004D	004E	004EG	004EM	004EMG	004CX5	004X5
	0 - 5	1k	4.5A	4.5B	4.5C	4.5D	4.5E	4.5EG	4.5EM	4.5EMG	4.5CX5	4.5X5
	0 - 10	2k	013A	013B	013C	013D	013E	013EG	013EM	013 EMG	013CX5	013X5
	0 - 20	4k	022A	022B	022C	022D	022E	022EG	022EM	022EMG	022CX5	022X5
0-300	0 - 1	400	121A	121B	121C	121D	121E	121EG	121EM	121EMG	121CX5	121X5
	0 - 2.5	1k	130A	130B	130C	130D	130E	130EG	130EM	130EMG	130CX5	130X5
	0 - 5	2k	005A	005B	005C	005D	005E	005EG	005EM	005EMG	005CX5	005X5
	0 - 10	4k	014A	014B	014C	014D	014E	014EG	014EM	014EMG	014CX5	014X5
	0 - 20	8k	023A	023B	023C	023D	023E	023EG	023EM	023EMG	023CX5	023X5
0-600	0 - 1	800	122A	122B	122C	122D	122E	122EG	122EM	122EMG	122CX5	122X5
	0 - 2.5	2k	131A	131B	131C	131D	131E	131EG	131EM	131EMG	131CX5	131X5
	0 - 5	4k	006A	006B	006C	006D	006E	006EG	006EM	006EMG	006CX5	006X5
	0 - 10	8k	015A	015B	015C	015D	015E	015EG	015EM	015EMG	015CX5	015X5
	0 - 20	16k	024A	024B	024C	024D	024E	024EG	024EM	024EMG	024CX5	024X5

NOTE: PART NUMBER 4.5 DENOTES 1½-ELEMENT UNIT.

OHIO SEMITRONICS, INC.
4242 REYNOLDS DRIVE * HILLIARD, OHIO * 43026-1264
PHONE: (614) 777-1005 * FAX: (614) 777-4511
WWW.OHIOSEMITRONICS.COM * 1-800-537-6732

PRECISION AC WATT OR VAR TRANSDUCER *MODELS* GW5- & GV5-

ACCURATE TO 0.2% OF READING

THREE-PHASE, FOUR-WIRE MODELS, INTERNAL SENSOR (THREE-ELEMENT)

AC INPUTS		F.S. WATTS or VARS	STANDARD OUTPUTS MODEL GW5- OR GV5-									
VOLTS	AMPS		0-±1mAdc*	0-±1mAdc	0-±10Vdc*	0-±10Vdc	4-20mAdc	4-20mA*	4-12-20mA	4-12-20mA*	0-±5Vdc*	0-±5Vdc
0-150 L-N**	0 - 1	300	125A	125B	125C	125D	125E	125EG	125EM	125EMG	125CX5	125X5
	0 - 2.5	750	132A	132B	132C	132D	132E	132EG	132EM	132EMG	132CX5	132X5
	0 - 5	1.5k	007A	007B	007C	007D	007E	007EG	007EM	007EMG	007CX5	007X5
	0 - 5	1.5k	7.5A	7.5B	7.5C	7.5D	7.5E	7.5EG	7.5EM	7.5EMG	7.5CX5	7.5X5
	0 - 10	3k	016A	016B	016C	016D	016E	016EG	016EM	016EMG	016CX5	016X5
	0 - 20	6k	025A	025B	025C	025D	025E	025EG	025EM	025EMG	025CX5	025X5
0-300 L-N**	0 - 1	600	126A	126B	126C	126D	126E	126EG	126EM	126EMG	126CX5	126X5
	0 - 2.5	1.5k	133A	133B	133C	133D	133E	133EG	133EM	133EMG	133CX5	133X5
	0 - 5	3k	008A	008B	008C	008D	008E	008EG	008EM	008EMG	008CX5	008X5
	0 - 5	3k	8.5A	8.5B	8.5C	8.5D	8.5E	8.5EG	8.5EM	8.5EMG	8.5CX5	8.5X5
	0 - 10	6k	017A	017B	017C	017D	017E	017EG	017EM	017EMG	017CX5	017X5
	0 - 20	12k	026A	026B	026C	026D	026E	026EG	026EM	026EMG	026CX5	026X5

NOTE: PART NUMBERS 7.5 & 8.5 DENOTE 2½-ELEMENT UNITS.

Voltage specifications are **line-to-neutral voltage.
***Denotes self-powered unit, limiting input voltage ranges to:
85-135 for 150Vac models
200-280 for 300Vac models
380-550 for 600Vac models
All others require 85-135Vac instrument power, 60Hz.

Optional 50ms output response to 90% - Add suffix **"W"**
Optional 230Vac instrument power - Add suffix **"-22"**
For UL Listed precision Watt transducers, see AGW Series.

50 HERTZ MODELS:
Add suffix "**-50**" to part number.

5 YEAR WARRANTY

ORDERING INFORMATION

Example: Self-Powered, Three-Phase, Four-Wire, 120V, 5A Input with 0-±5Vdc Output, Proportional to 0-±1500Watts.
GW5-007CX5

ORDERING INFORMATION

Example: Self-Powered, Three-Phase, Four-Wire, 120V, 5A Input with 0-±1mAdc Output, Proportional to 0-±1500VAR.
GV5-007A

SPECIFICATIONS

INPUT

Voltage ..... See Tables
Current ..... See Tables
Frequency Range
GW5 ..... standard 58-62Hz
with "**-50**" option 48-52Hz
GV5 ..... standard 60Hz
with "**-50**" option 50Hz
Power Factor ..... Any
Burden
Voltage ..... ≤0.1VA/element
Current ..... ≤0.28VA/element
Overload
Voltage .. continuous ... 0-150Vac Range 175Vac
0-300Vac Range 350Vac
0-600Vac Range 600Vac
Current .. continuous ... 0-1, 2.5, 5, 10Aac Ranges .. 2 X F.S.
0-20Aac Range 20A
transient ..... 0-1, 2.5Aac Ranges... 20A...10s/hr
0-5,10, 20A Ranges... 50A...10s/hr
0-1, 2.5Aac Ranges... 100A...1s/hr
0-5,10, 20A Ranges... 250A...1s/hr

INSTRUMENT POWER

"**B**", "**D**", "**E**", "**EM**", "**X5**" models 85-135Vac, 60Hz, 7VA
"**-22**" option ..... 230Vac, 50/60Hz, ±15%
"**A**", "**C**", "**CX5**", "**EG**" or "**EMG**" models ..... Not required

OUTPUT

GV5 ..... + = Lagging/ - = Leading
Loading
"**A**" & "**B**" models ..... (0-1mA output) 0-10kΩ
"**C**" & "**D**" models ..... (0-10Vdc output) ..... 2kΩ min.
"**E**", "**EG**", "**EM**", "**EMG**" models (4-20mAdc output) 0-500Ω
"**CX5**" & "**X5**" models ... (0-5Vdc output) ..... 2kΩ min.
Response ..... standard (to 99%) ..... ≤400ms
with "**W**" option (to 90%) ... ≤50ms
Field Adjustable Cal. ..... ±2%

DIELECTRIC TEST

Input/Output/Case ..... 1800Vac (RMS)
Surge ..... Withstands IEEE SWC test

TEMPERATURE & PHYSICAL

Operating Range ..... -20ºC to 65ºC
Temperature Effect (-20ºC to 65ºC) ..... ±0.005%/ºC
Storage Range ..... -40ºC to 70ºC
Operating Humidity ..... 0-95% non-condensing

ACCURACY

Includes combined effects of voltage, current, load and power factor.
GW5 ..... ±0.2% Rdg./PF, ±0.04% F.S.
GV5 ..... ±0.2% Rdg./sinθ, ±0.04% F.S.
Output Ripple ..... <0.5% F.S.

OHIO SEMITRONICS, INC.
4242 REYNOLDS DRIVE * HILLIARD, OHIO * 43026-1264
PHONE: (614) 777-1005 * FAX: (614) 777-4511
WWW.OHIOSEMITRONICS.COM * 1-800-537-6732

SINGLE-PHASE CONNECTIONS
(1 ELEMENT)

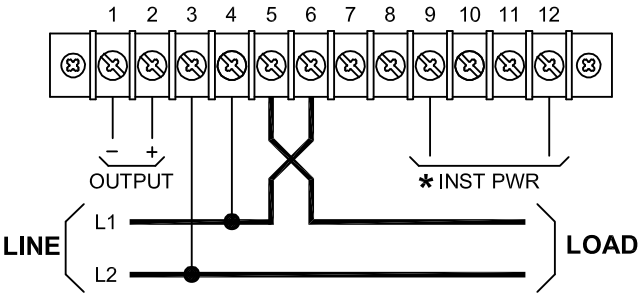

DIRECT CONNECTION

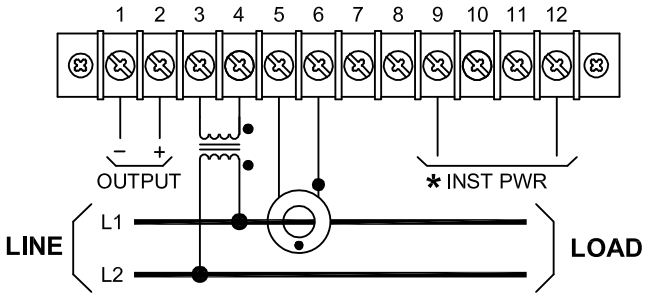

USING POTENTIAL AND CURRENT TRANSFORMERS

THREE-PHASE, THREE-WIRE CONNECTIONS
(1-1/2 ELEMENT)

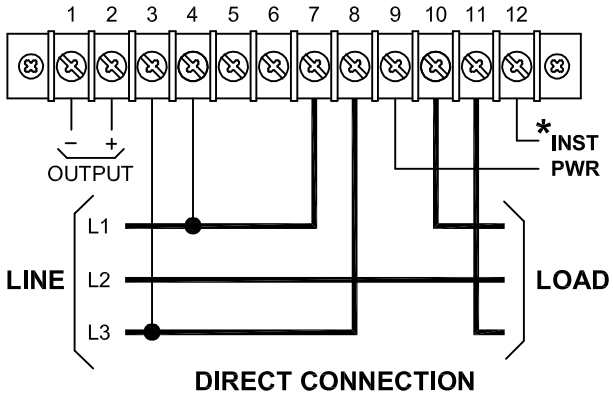

DIRECT CONNECTION

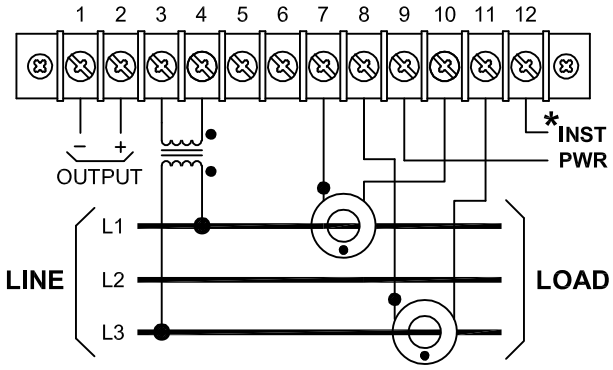

USING POTENTIAL AND CURRENT TRANSFORMERS

THREE-PHASE, THREE-WIRE CONNECTIONS
(2 ELEMENT)

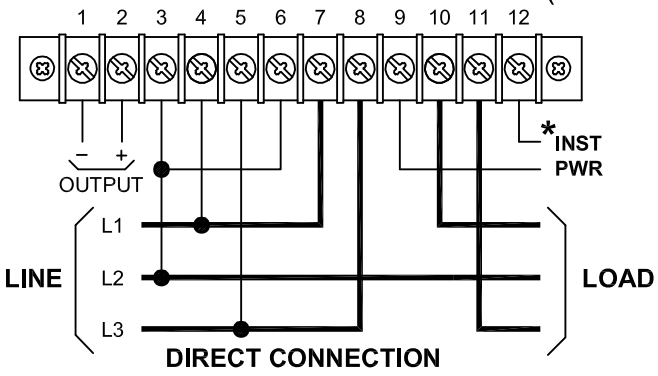

DIRECT CONNECTION

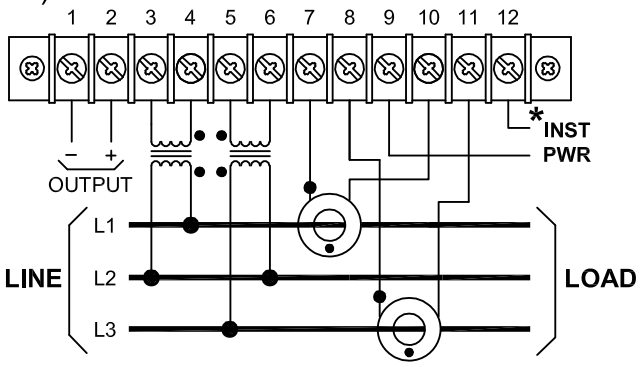

USING POTENTIAL AND CURRENT TRANSFORMERS

* 115Vac ON MODELS WITH B, D, E, EM OR X5 SUFFIX.
* 230Vac ON MODELS WITH -22 SUFFIX.
* NOT REQUIRED ON MODELS WITH A, C, CX5, EG OR EMG SUFFIX.

Dwg# 0902-00873-B Rev A

OHIO SEMITRONICS, INC.
4242 REYNOLDS DRIVE * HILLIARD, OHIO * 43026-1264
PHONE: (614) 777-1005 * FAX: (614) 777-4511
WWW.OHIOSEMITRONICS.COM * 1-800-537-6732

THREE-PHASE, FOUR-WIRE CONNECTIONS
(2-1/2 ELEMENT)

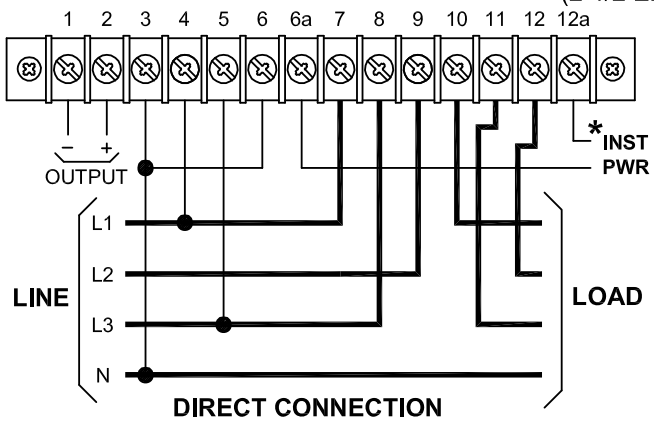

DIRECT CONNECTION

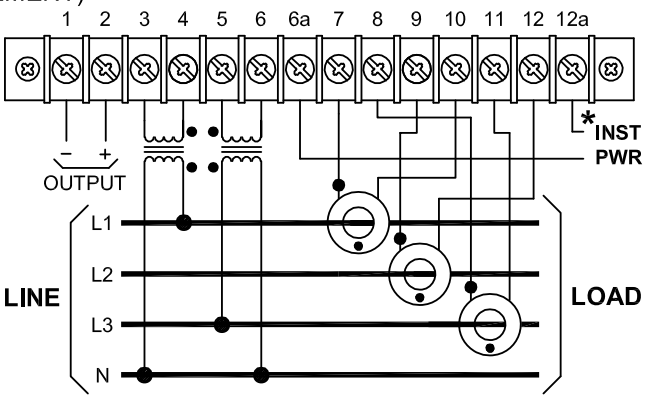

USING POTENTIAL AND CURRENT TRANSFORMERS

THREE-PHASE, FOUR-WIRE CONNECTIONS
(3 ELEMENT)

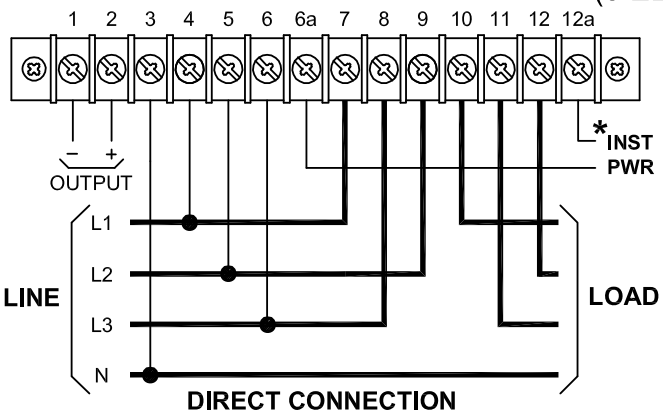

DIRECT CONNECTION

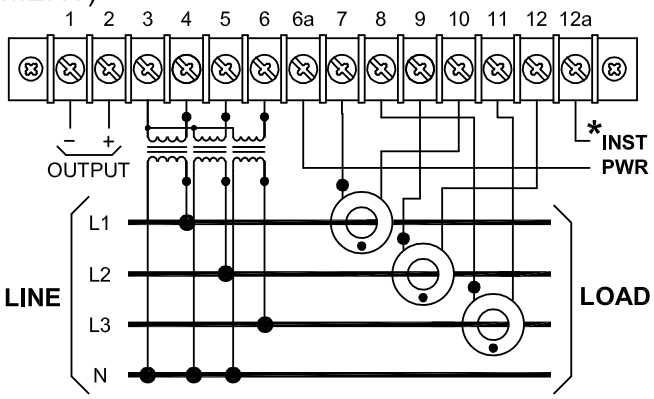

USING POTENTIAL AND CURRENT TRANSFORMERS

* 115Vac ON MODELS WITH B, D, E, EM OR X5 SUFFIX.
* 230Vac ON MODELS WITH -22 SUFFIX.
* NOT REQUIRED ON MODELS WITH A, C, CX5, EG OR EMG SUFFIX.

Dwg# 0902-00873-B Rev A

CASE DIMENSIONS

MODELS WITH 1mA, 5V OR 10V OUTPUTS

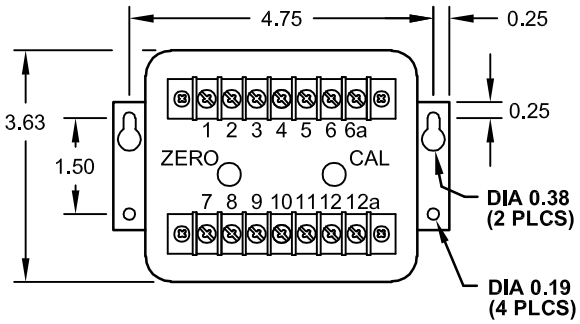

CASE HEIGHT 5.38"
1PH 2W 2.3 LBS
3PH 3W 2.7 LBS
3PH 4W 3.1 LBS

MODELS WITH 4-20mA OUTPUTS

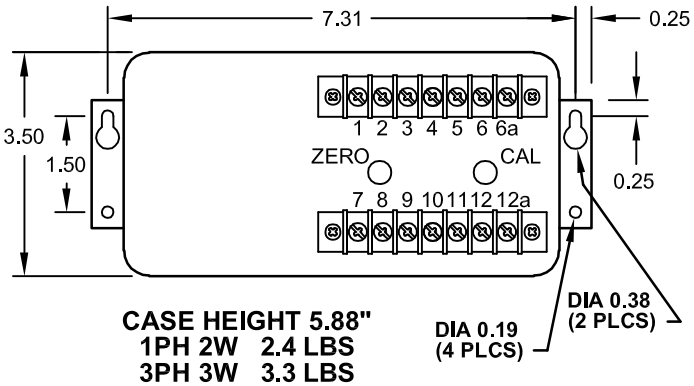

CASE HEIGHT 5.88"
1PH 2W 2.4 LBS
3PH 3W 3.3 LBS
3PH 4W 4.4 LBS

ALL DIMENSIONS IN INCHES.

Dwg# 0902-00873-B Rev A

OHIO SEMITRONICS, INC.
4242 REYNOLDS DRIVE * HILLIARD, OHIO * 43026-1264
PHONE: (614) 777-1005 * FAX: (614) 777-4511
WWW.OHIOSEMITRONICS.COM * 1-800-537-6732